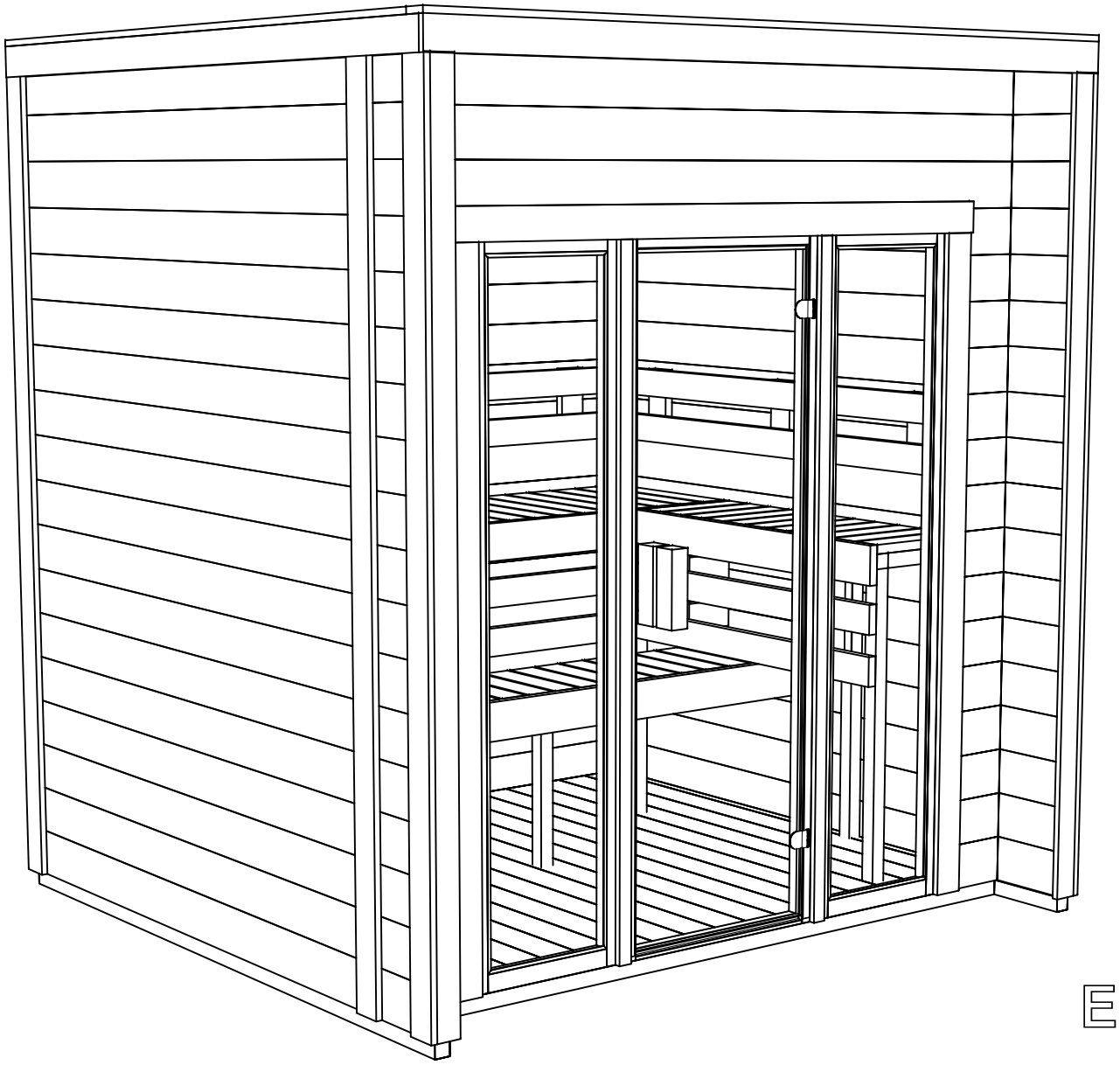

SAUNA Specialist

ESKER M77

4472960

1980 Rue Monterey, Laval, QC H7L 3S3, Canada

1(855) 689-2422

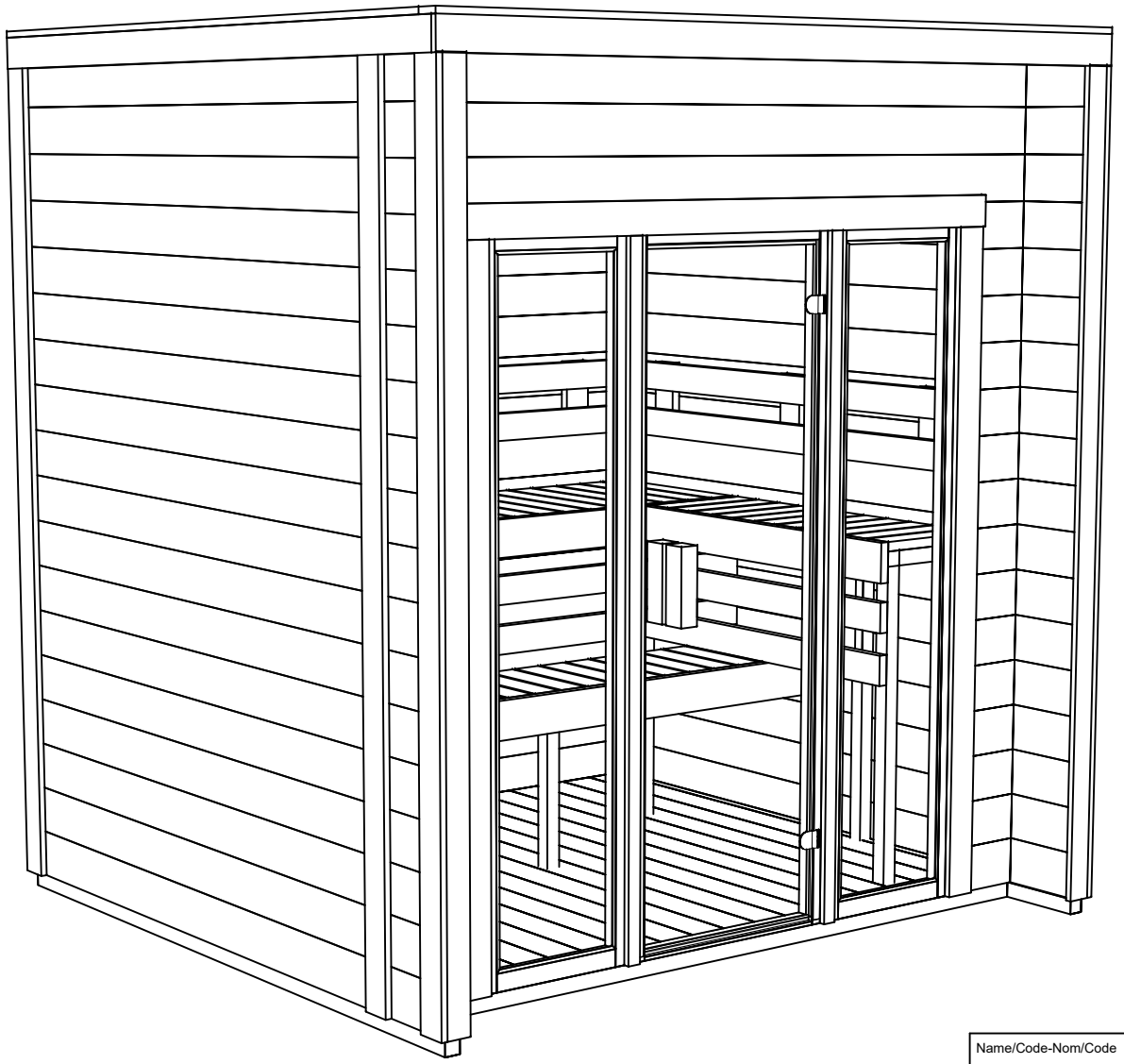

Name/Code-Nom/Code	4472960	Sheet--Feuille	1
Drawing-Dessin	3D	Scale-Échelle	
Material	44x135 [1.7″x5.3″]	Date	06.10.2026
Drawn-Dessiné	SRM	File	4472960.dwg

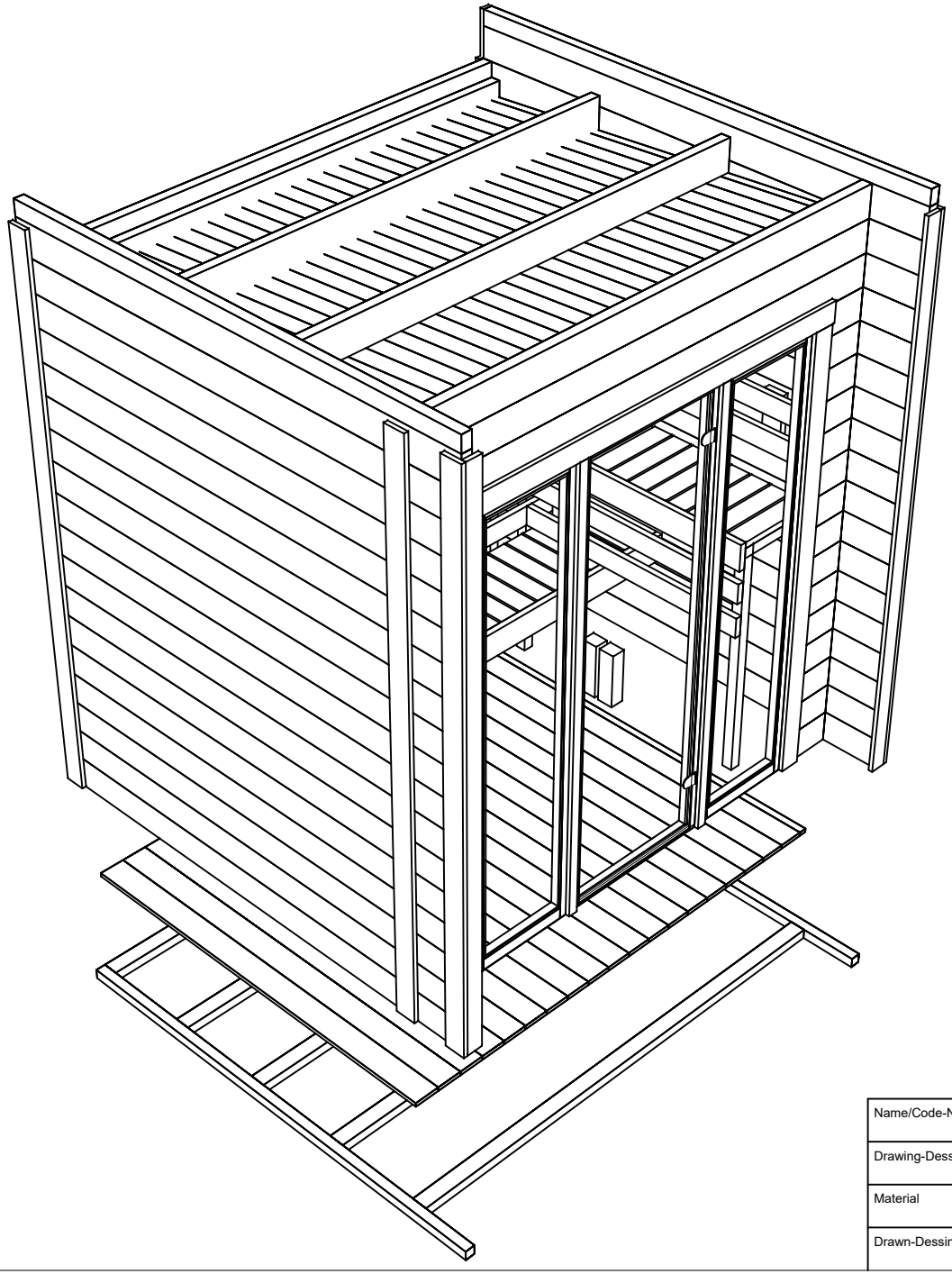

Name/Code-Nom/Code	4472960	Sheet--Feuille	2
Drawing-Dessin	3D	Scale-Échelle	
Material	44x135 [1.7″x5.3″]	Date	06.10.2026
Drawn-Dessiné	SRM	File	4472960.dwg

H = 1.700 m [5'-7"]
TOTAL: 4.00 m² [43.06 ft²]

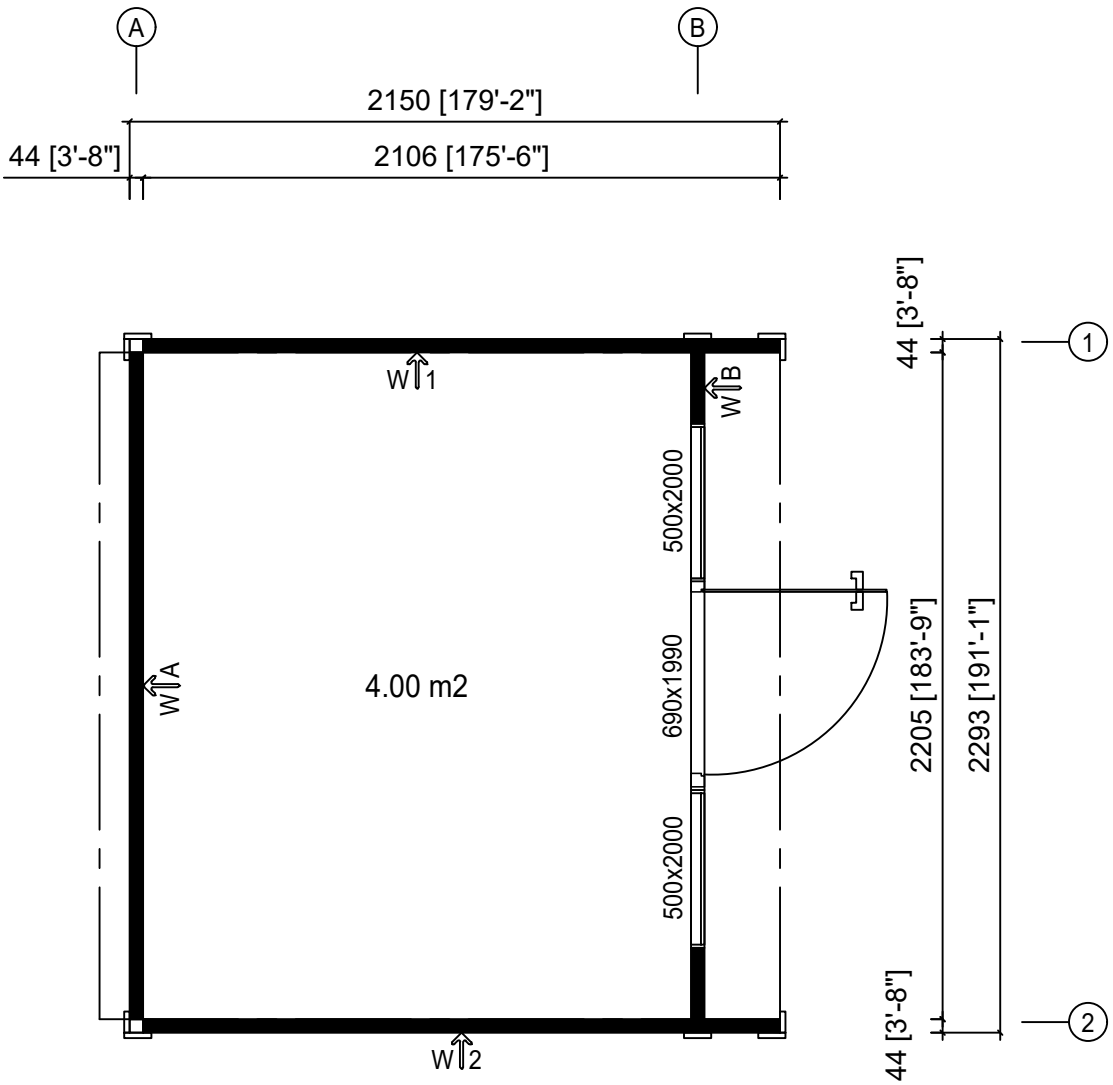

Name/Code-Nom/Code	4472960	Sheet–Feuille	3
Drawing-Dessin	GROUND PLAN – PLAN AU SOL	Scale-Échelle	1:25
Material-Matériau	44x135 [1.7"x5.3"]	Date	06.10.2026
Drawn-Dessiné	SRM	File	4472960.dwg

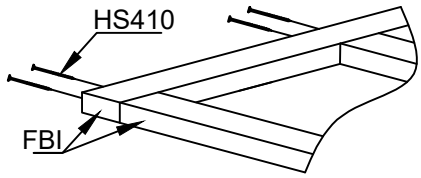

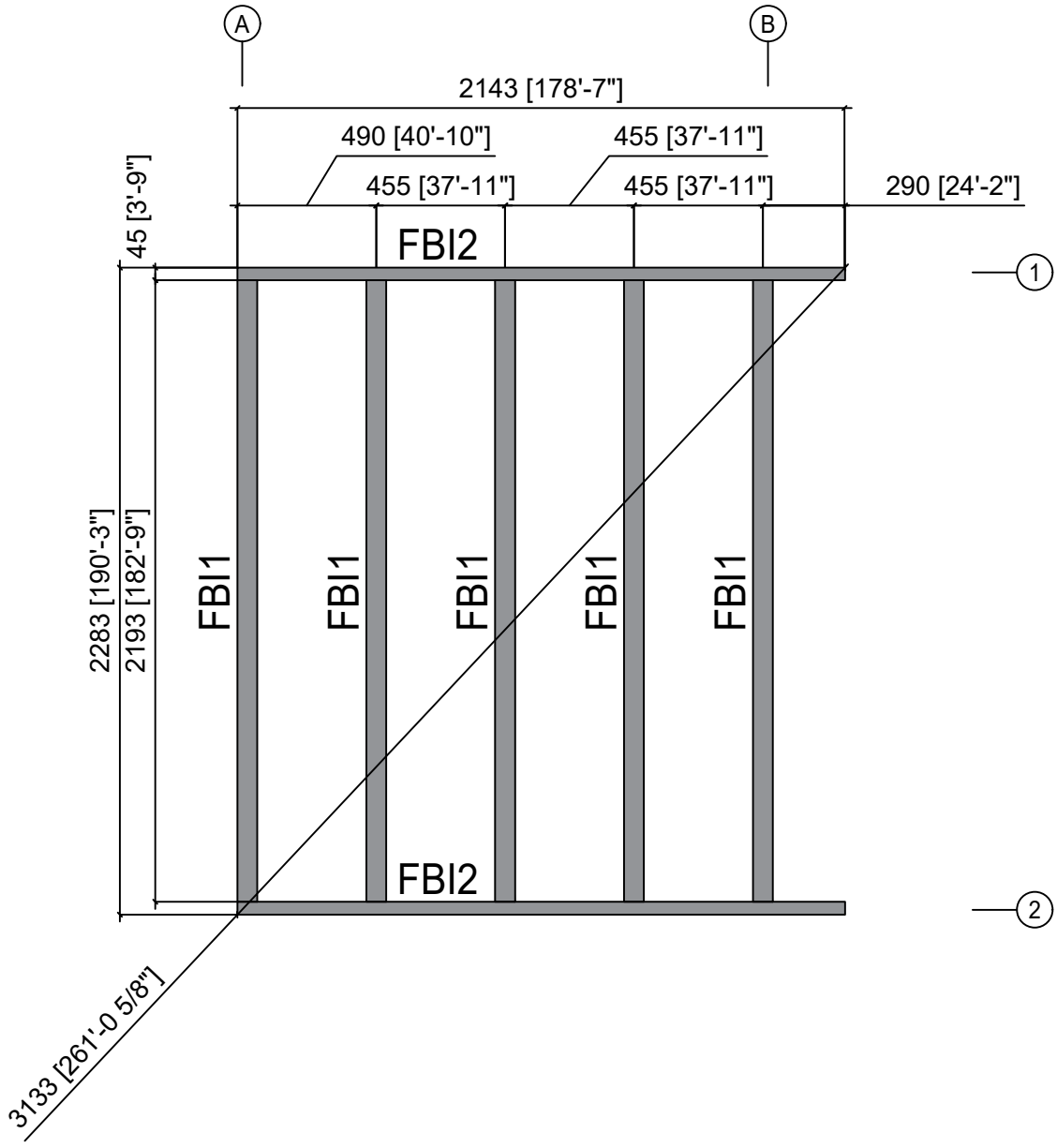

Name/Code-Nom/Code	4472960	Sheet–Feuille	4
Drawing-Dessin	BASE FRAME IMPR. – CADRE DE FOND. IMPR.	Scale-Échelle	1:25
Material-Matériau	70x45[1.8″x1.8″]	Date	06.10.2026
Drawn-Dessiné	SRM	File	4472960.dwg

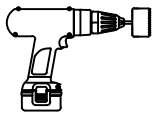

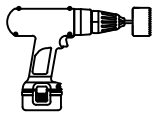

Name/Code-Nom/Code	4472960	Sheet–Feuille	5
Drawing-Dessin	WALL - MUR B	Scale-Échelle	1:25
Material-Matériau	44x135 [1.7"x5.3"]	Date	06.10.2026
Drawn-Dessiné	SRM	File	4472960.dwg

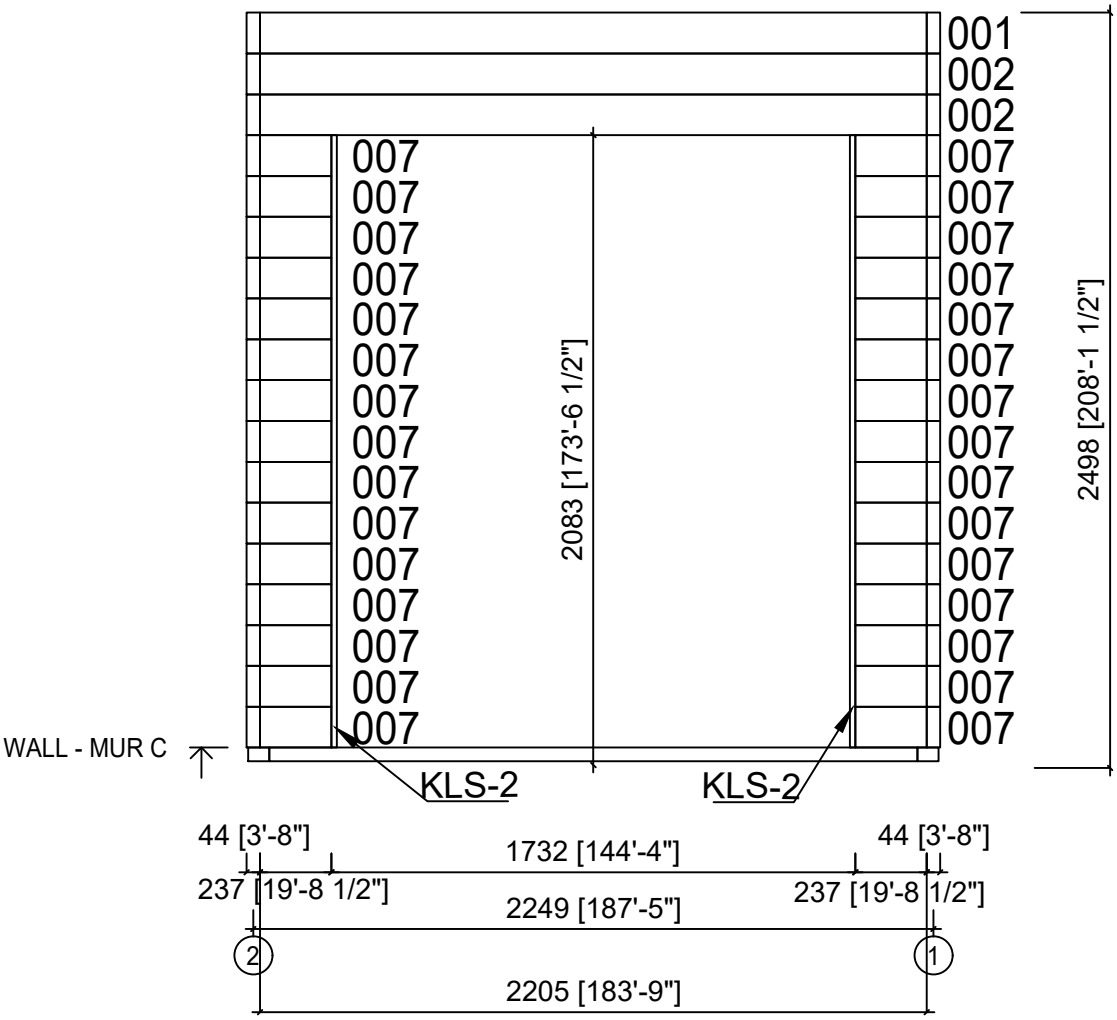

Name/Code-Nom/Code	4472960	Sheet–Feuille	6
Drawing-Dessin	WALL - MUR C	Scale-Échelle	1:25
Material-Matériau	44x135 [1.7"x5.3"]	Date	06.10.2026
Drawn-Dessiné	SRM	File	4472960.dwg

OP-1

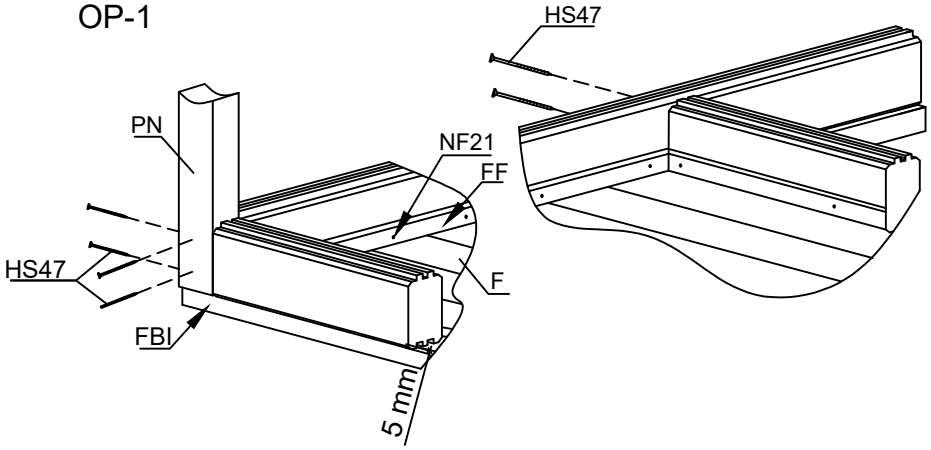

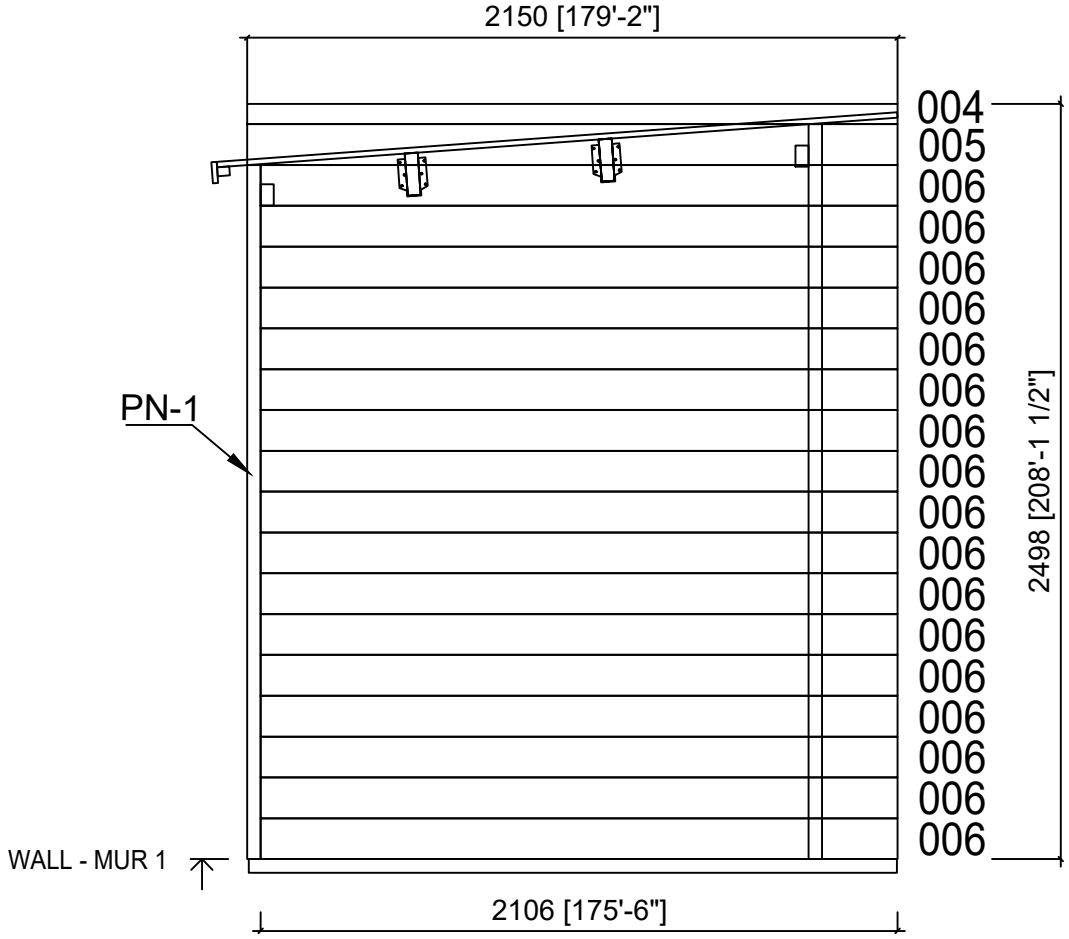

OP-2

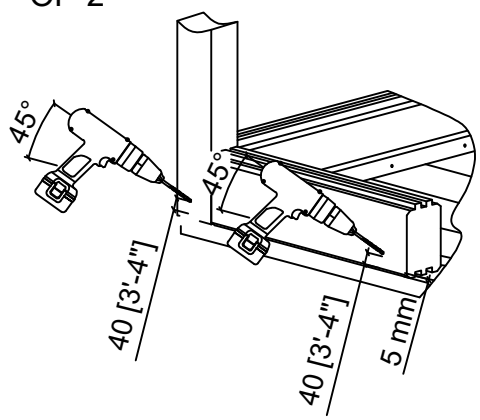

OP-3

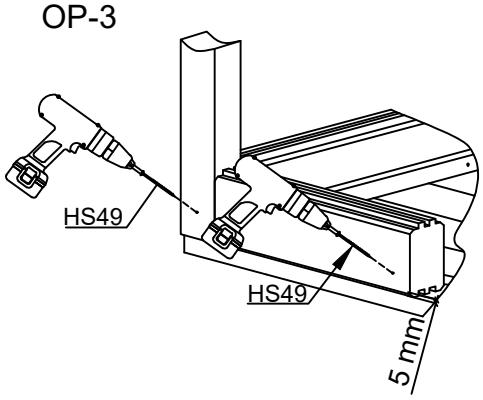

Name/Code-Nom/Code	4472960	Sheet–Feuille	7
Drawing-Dessin	WALL - MUR 1	Scale-Échelle	1:25
Material-Matériau	44x135 [1.7"x5.3"]	Date	06.10.2026
Drawn-Dessiné	SRM	File	4472960.dwg

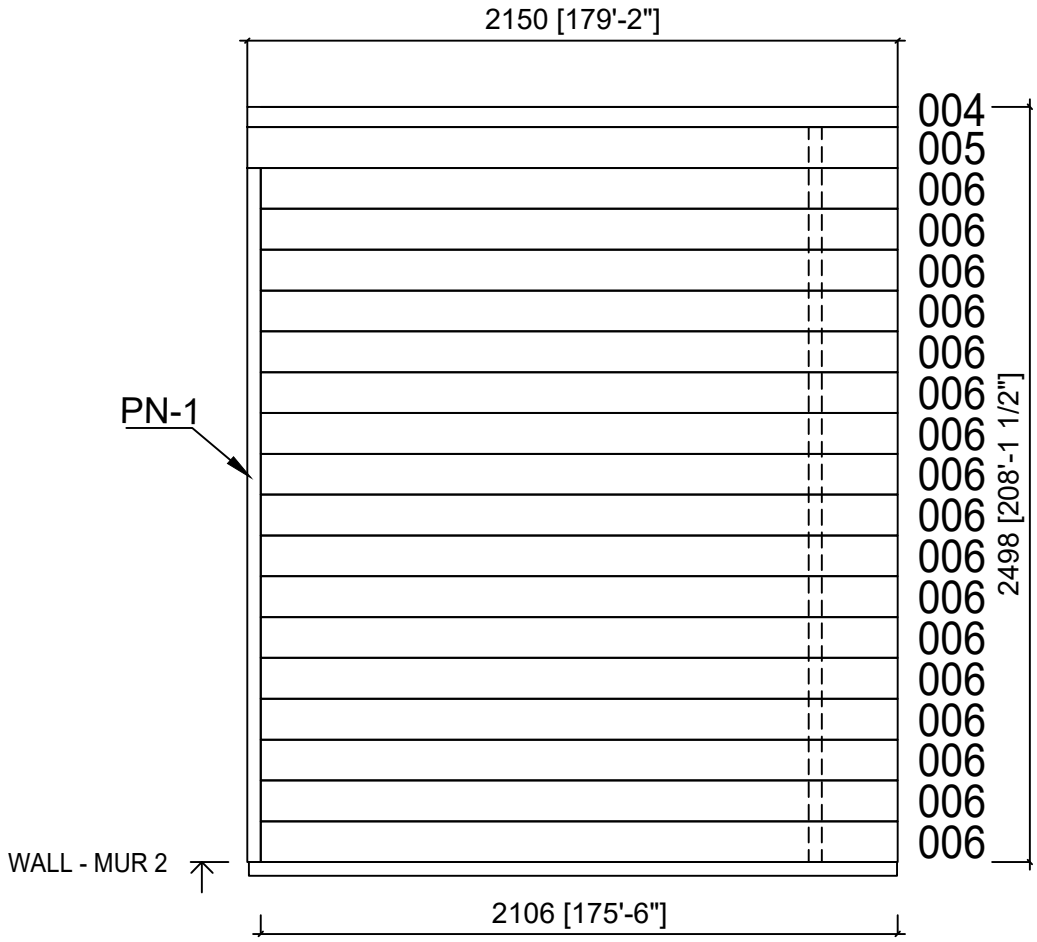

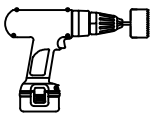

Name/Code-Nom/Code	4472960	Sheet–Feuille	8
Drawing-Dessin	WALL - MUR 2	Scale-Échelle	1:25
Material-Matériau	44x135 [1.7"x5.3"]	Date	06.10.2026
Drawn-Dessiné	SRM	File	4472960.dwg

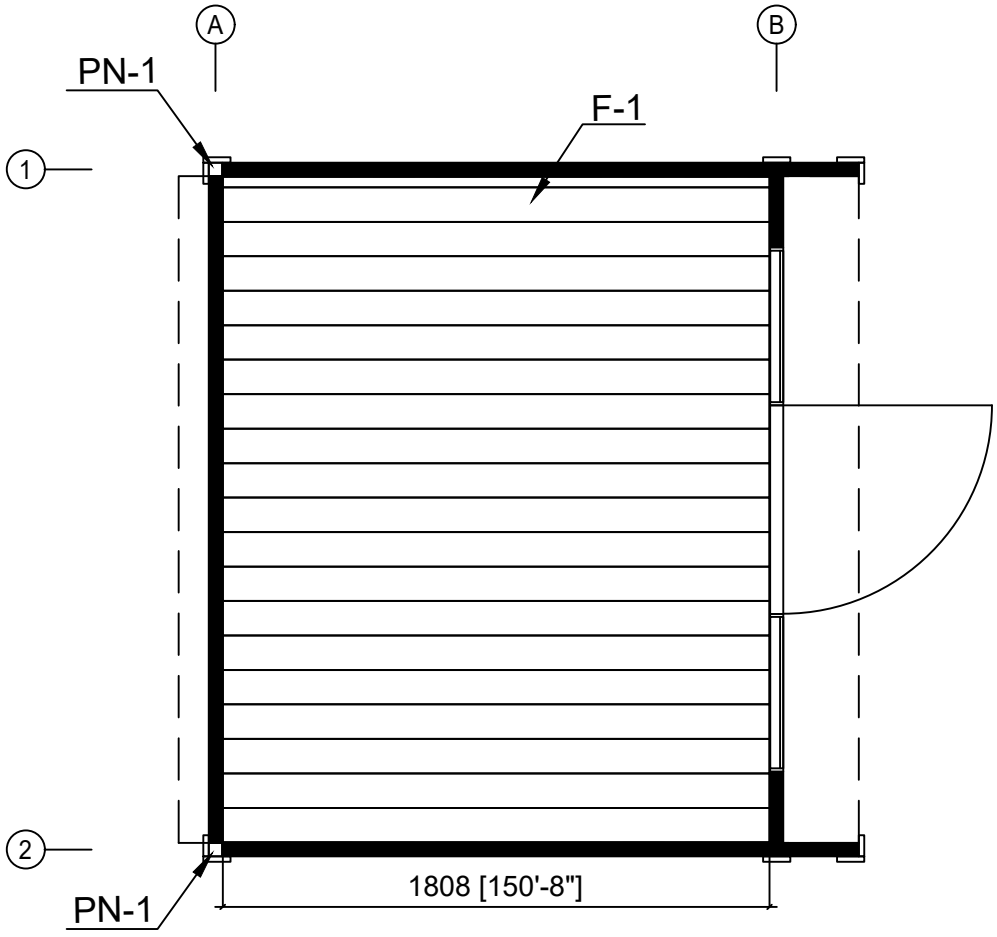

Name/Code-Nom/Code	4472960	Sheet–Feuille	9
Drawing-Dessin	FLOORBOARD - LAME DE PLANCHER	Scale-Échelle	1:25
Material-Matériau	88x18 [3.5" x 0.7"] or-ou 114x18 [4.5" x 0.7"]	Date	06.10.2026
Drawn-Dessiné	SRM	File	4472960.dwg

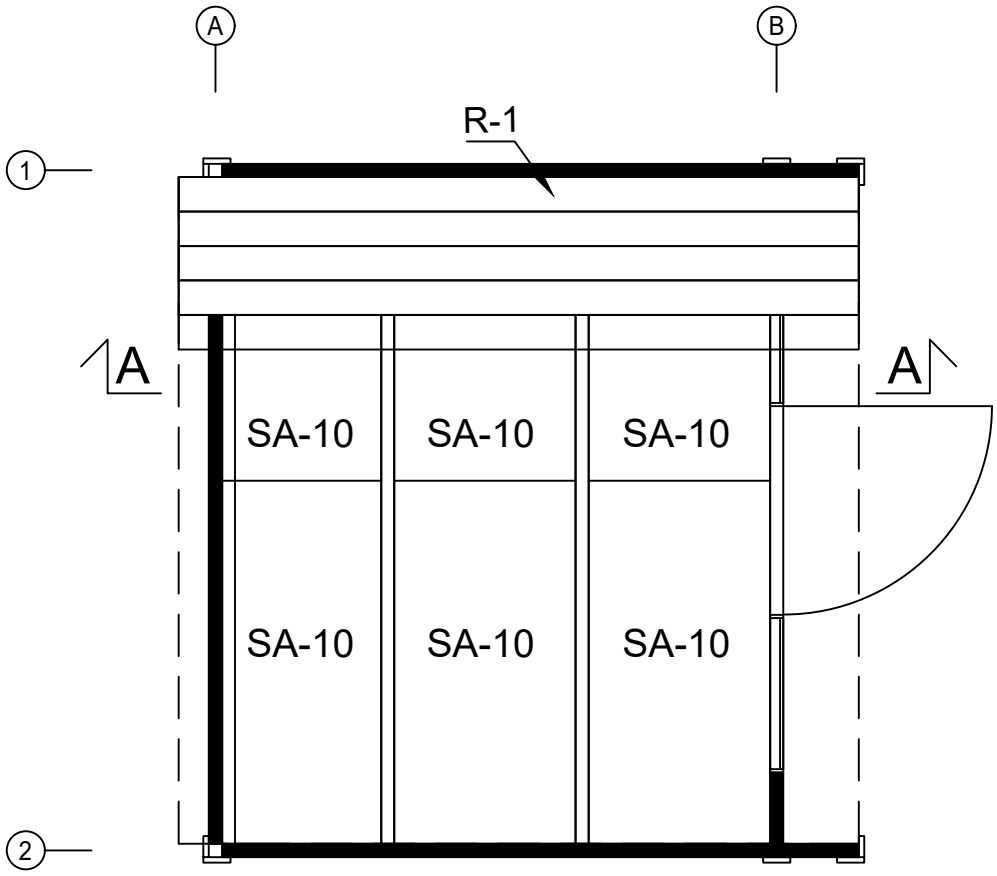

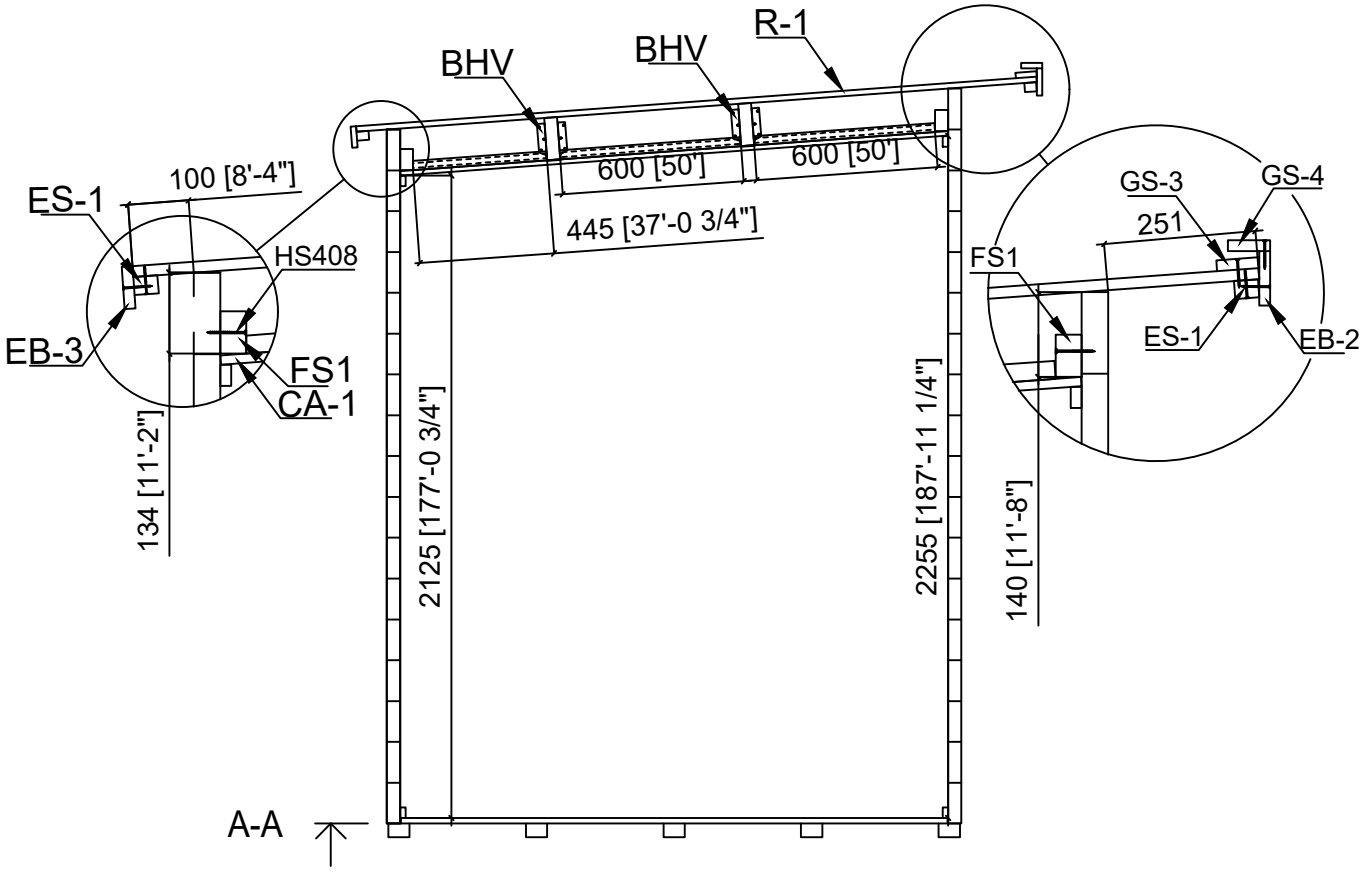

Name/Code-Nom/Code	4472960	Sheet–Feuille	10
Drawing-Dessin	ROOF PLAN - PLAN DE TOITURE	Scale-Échelle	1:25
Material-Matériau	44x135 [1.7"x5.3"]	Date	06.10.2026
Drawn-Dessiné	SRM	File	4472960.dwg

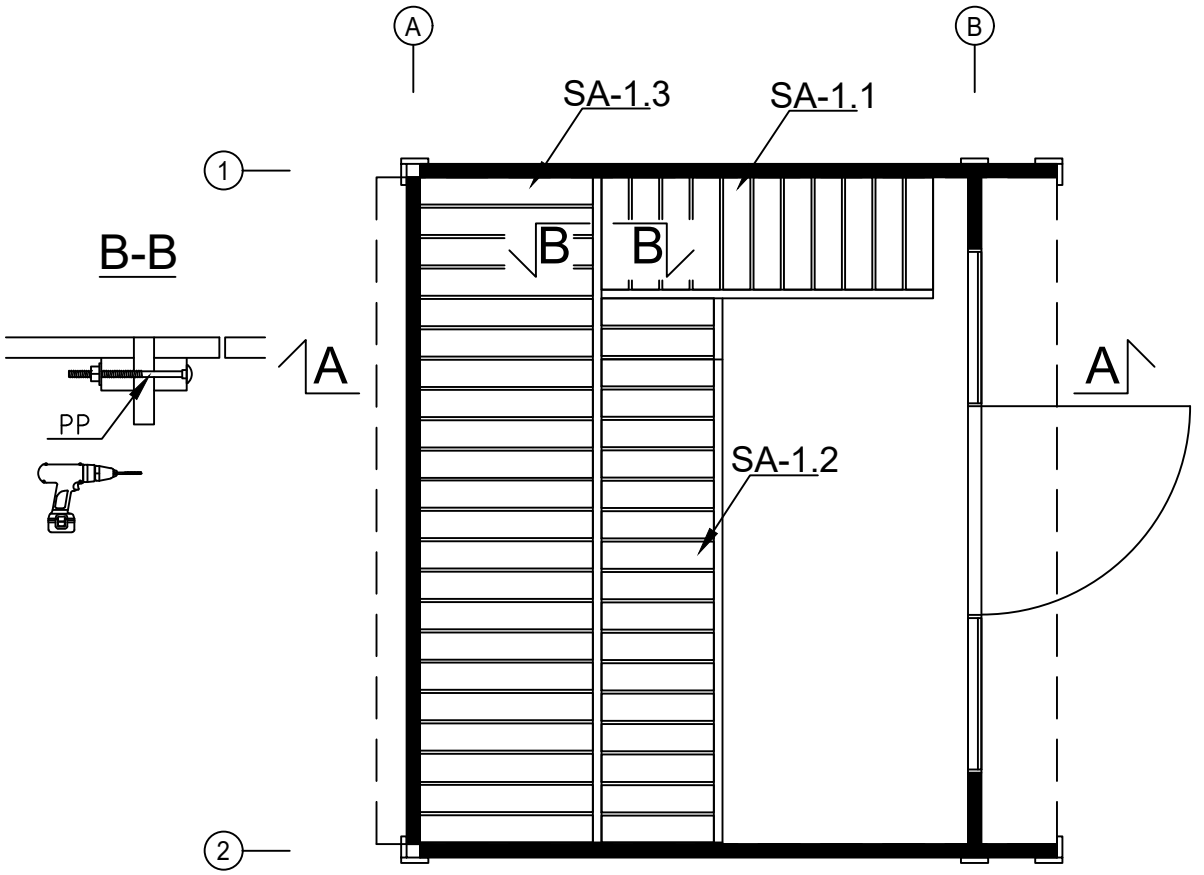

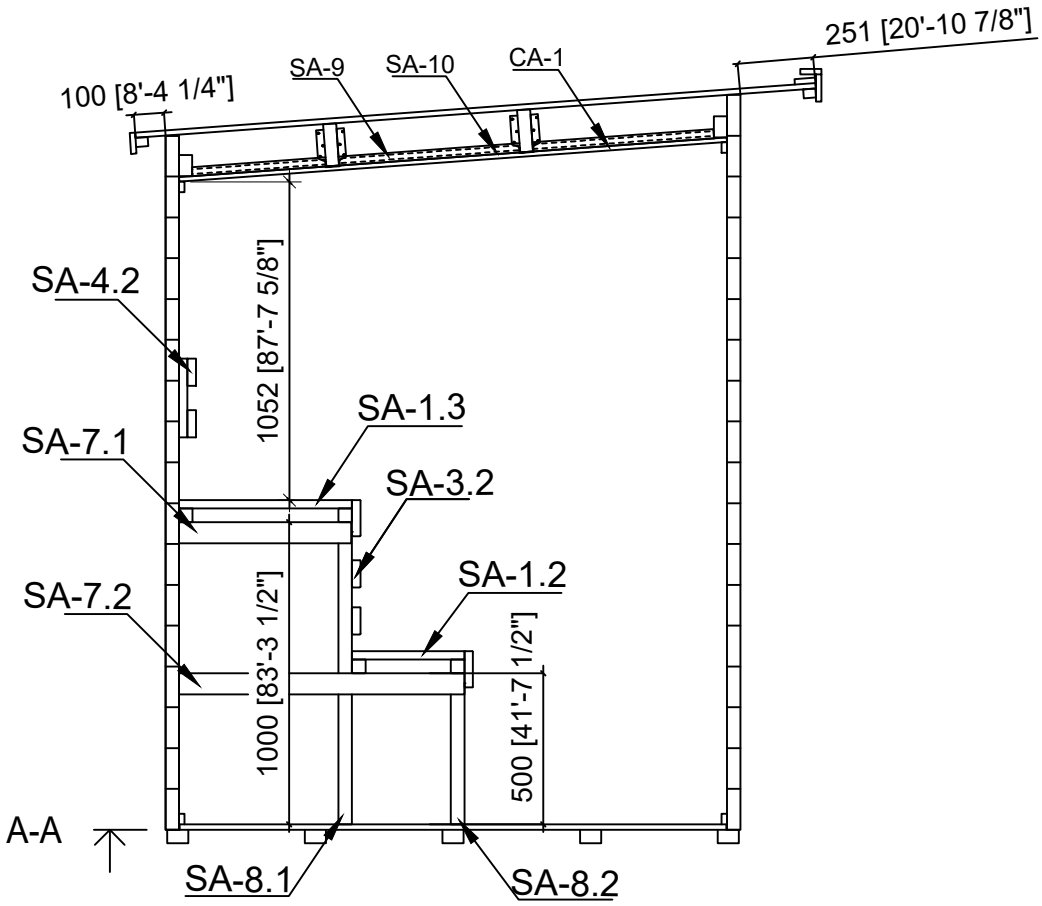

Name/Code-Nom/Code	4472960	Sheet–Feuille	11
Drawing-Dessin	SAUNA INT. - INT. SAUNA	Scale-Échelle	1:25
Material-Matériau	44x135 [1.7"x5.3"]	Date	06.10.2026
Drawn-Dessiné	SRM	File	4472960.dwg

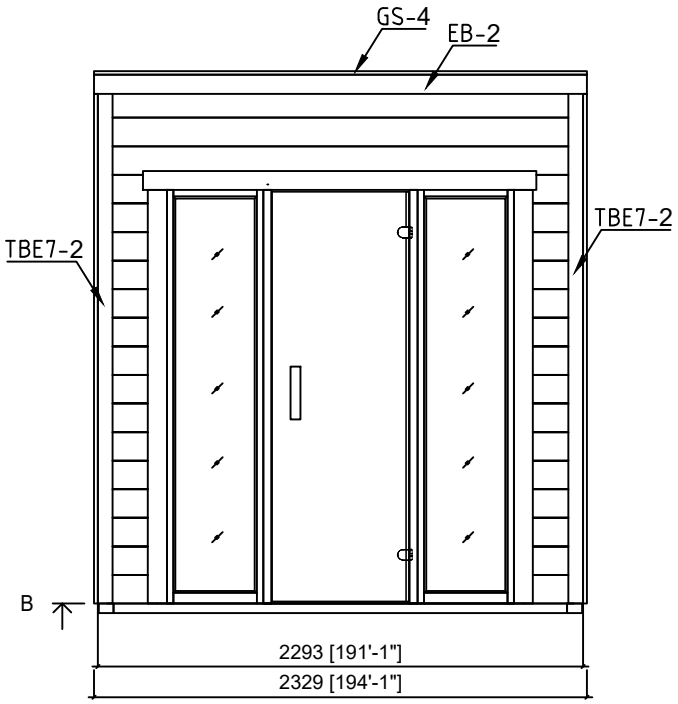

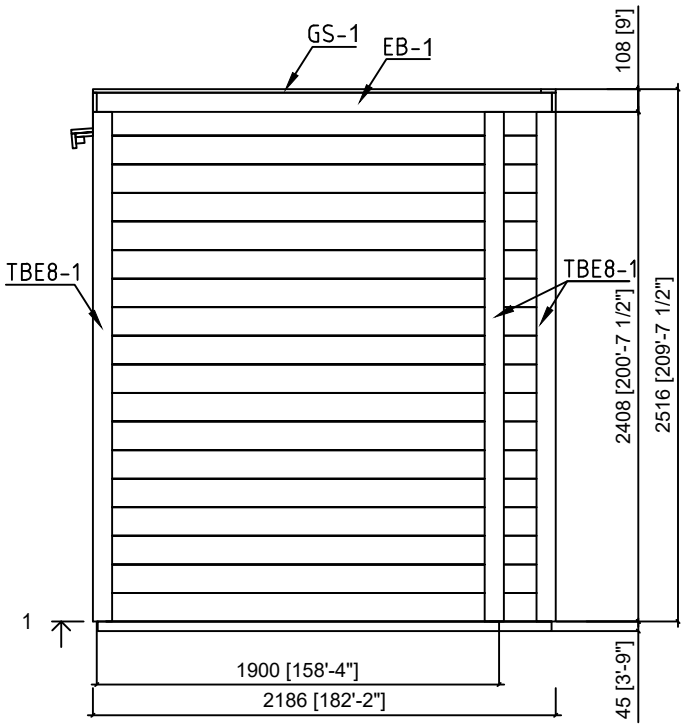

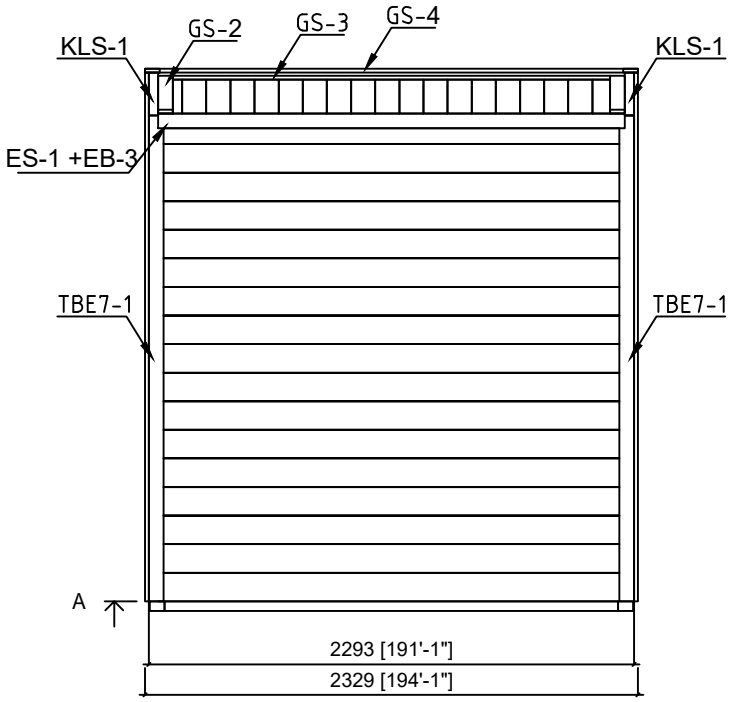

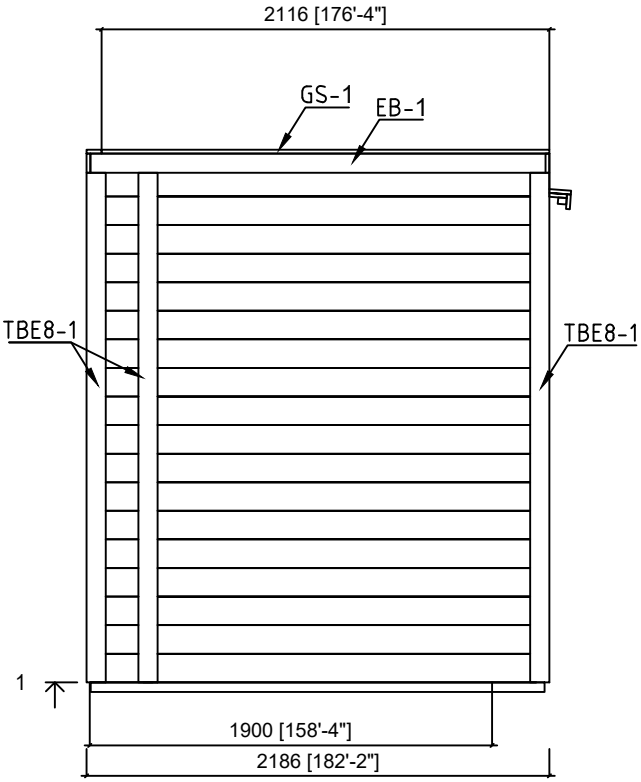

Name/Code-Nom/Code	4472960	Sheet–Feuille	12
Drawing-Dessin	ELEVATIONS – FAÇADES	Scale-Échelle	1:25
Material-Matériau	44x135 [1.7"x5.3"]	Date	06.10.2026
Drawn-Dessiné	SRM	File	4472960.dwg

POS	PIECE LIST – LISTE DES PIÈCES 4472960	Pcs. Pc.	Profile Profil (mm)	Length Longueur (mm)
001	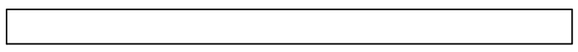	2	44x135 [1.7"x5.3"]	2205 [7'-2.8"]
002	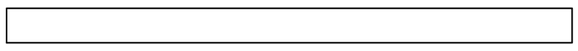	18	44x135 [1.7"x5.3"]	2205 [7'-2.8"]
003	ADDITIONAL TIMBER BEAM - POUTRE ADDITIONNELLE 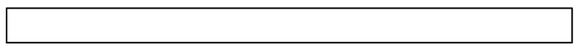	1	44x135 [1.7"x5.3"]	2205 [7'-2.8"]
004	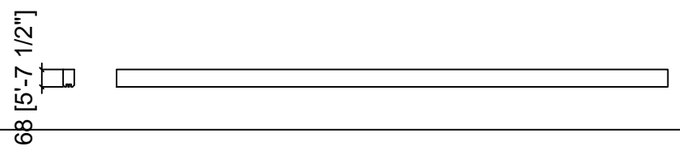	2	44x68 [1.7"x2.7"]	2150 [7'-0.6"]
005	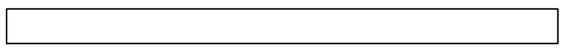	2	44x135 [1.7"x5.3"]	2150 [7'-0.6"]
006	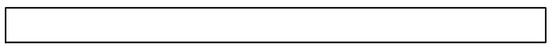	34	44x135 [1.7"x5.3"]	2106 [6'-10.9"]
007		30	44x135 [1.7"x5.3"]	237 [9.3"]
FBI1	FLOOR JOISTS TREATED - LAMBOURDES TRAITEES 	5	70x45 [2.8"x1.8"]	2193 [7'-2.3"]
FBI2	FLOOR JOISTS TREATED - LAMBOURDES TRAITEES 	2	45x45 [1.8"x1.8"]	2145 [7'-0.4"]
FS1	FIXING STRIP - LISTEL DE FIXATION 	2	43x70 [1.7"x2.8"]	2205 [7'-2.8"]
RB1	MAIN PURLINS - PANNES PRINCIPALES 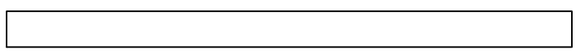	2	43x140 [1.7"x5.5"]	2204 [7'-2.8"]
SH	DRIVING BLOCK - CALE DE FRAPPE 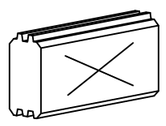	2	44x135 [1.7"x5.3"]	300 [11.8"]
R-1	ROOF BOARD - VOLIGE 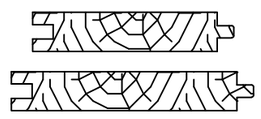	25+1 20+1	88x18 [3.5"x0.7"] 114x18 [0'-4.5" x 0'-0.7"]	2256 [7'-4.8"]
F-1	FLOORBOARD - LAME DE PLANCHER 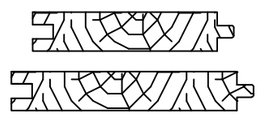	25+1 20+1	88x18 [3.5"x0.7"] 114x18 [0'-4.5" x 0'-0.7"]	1808 [5'-11.2"]
FF-1	FLOOR FILLET – PLINTHE DE SOL 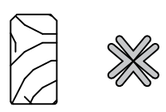		18x35 [0.7"x1.4"]	18,0 [59'-0.7"] Rm/ Ml
KLS-1	COVERING BOARD - PROFILS DE FINITION 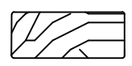	2	18x44 [0.7"x1.7"]	203 [81.0"]
KLS-2	COVERING BOARD - PROFILS DE FINITION 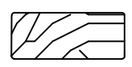	2	18x44 [0.7"x1.7"]	2025 [6'-7.7"]
TBE7-1	CORNER FILLET - BAGUETTE DE FIXATION DU ANGLE 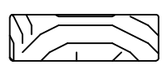	2	18x70 [0.7"x2.8"]	2300 [7'-6.6"]
TBE7-2	CORNER FILLET - BAGUETTE DE FIXATION DU ANGLE 	2	18x70 [0.7"x2.8"]	2410 [7'-10.9"]
TBE8-1	CORNER FILLET - BAGUETTE DE FIXATION DU ANGLE 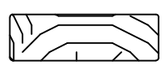	6	18x90 [0.7"x3.5"]	2410 [7'-10.9"]
PN-1	CORNER FILLET - BAGUETTE DE FIXATION DU ANGLE 	2	43x43 [1.7"x1.7"]	2300 [7'-6.6"]
EB-1	EAVES BOARD - BANDEAU DE TOIT 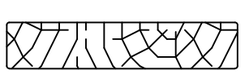	2	18x90 [0.7"x3.5"]	2168 [7'-1.4"]
EB-2	EAVES BOARD - BANDEAU DE TOIT 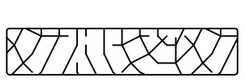	1	18x90 [0.7"x3.5"]	2330 [7'-7.7"]

Name/Code-Nom/Code	*4472960*	Date	*06.10.2026*	Sheet–Feuille	*1/3*

POS	PIECE LIST – LISTE DES PIÈCES 4472960		Pcs. Pc.	Profile Profil (mm)	Length Longueur (mm)
EB-3	EAVES BOARD - BANDEAU DE TOIT		1	18x70 [0.7"x2.8"]	2205 [7'-2.8"]
ES-1	EAVES STRIP – BANDE DE RIVE	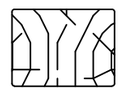	2	30x40 [1.2"x1.6"]	2205 [7'-2.8"]
GS-1	ROOFING FELT FILLET – TASSEAU DE COUVERTURE		2	18x70 [0.7"x2.8"]	2116 [6'-11.3"]
GS-2	ROOFING FELT FILLET – TASSEAU DE COUVERTURE		1	18x70 [0.7"x2.8"]	2205 [7'-2.8"]
GS-3	ROOFING FELT FILLET – TASSEAU DE COUVERTURE	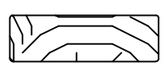	2	18x70 [0.7"x2.8"]	2206 [7'-2.9"]
GS-4	ROOFING FELT FILLET – TASSEAU DE COUVERTURE	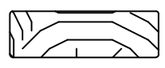	1	18x70 [0.7"x2.8"]	2330 [7'-7.7"]
HS34	SCREW FOR COVERING BOARD - VIS POUR PROFILS DE FINITION / KLS	118 	227	Ø4.5x50 [#9 x 2"]	
	SCREW FOR COVERING MOULDING - VIS DE FIXATION POUR PROFILS DE FINITION	40			
	SCREW FOR EAVES BOARDS - VIS DE FIXATION POUR BANDEAU DE TOIT / EB	22			
	SCREW FOR ROOF EDGE REINFORCEMENT - VIS POUR RENFORT DE BORD DE TOIT / ES	12			
	SCREW FOR ROOFING FELT - VIS POUR BAGUETTE FIXATION FEUTRE BITUMEUX / GS	35			
HS49	SCREW FOR 1. WALL BEAM – VIS DE POUTRE DE PAROI 1	11 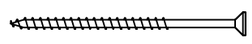	31	Ø5.0x100 [#10 x 4"]	
	SCREW FOR FOUNDATION BEAM – VIS DE SOLIVE DE FONDATION / FBI	20			
HS47	SCREW FOR ROOF FIXING SLAT - VIS POUR TASSEAU FIXATION VOLIGE / FS1, FS2	16 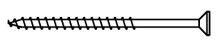	166	Ø5x80 [#10 x 3 1/8"]	
	SCREW FOR WALL MOUNTING - VIS DE FIXATION AU MUR	150			
HS25	SCREW FOR JOIST HANGER – VIS POUR SABOT DE CHARPENTE / BVH		40	ø4.5x35 [#9 x 1 3/8"]	
NF21	NAIL FOR FLOOR STRIPS – CLOU POUR PLINTHES DE SOL / FF		32	Ø2x40 [#14 x 1 9/16"]	
NF32	NAIL FOR ROOF – CLOU POUR TOITURE / R	110 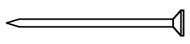	250	Ø2.5x60 [#12 x 2 3/8"]	
	NAIL FOR FLOOR – CLOU POUR PLANCHER / F	140			
BHV	BEAM HOLDER - SUPPORT EN U GALVANISÉ		4		

Name/Code-Nom/Code	4472960	Date	06.10.2026	Sheet–Feuille	2/3

POS	PIECE LIST – LISTE DES PIÈCES 4472960		Pcs. Pc.	Profile Profil (mm)	Length Longueur (mm)
AST_PRE	WINDOW - FENETRE [1'-7.7"x6'-6.7"]	FIXED - FIXE	2	500x2000	
SAUNA	DOOR-PORTE [2'-3.2"x6'-6.7"]	RIGHT HANDED – DROITE	1	690x2000	

