Pail shower

Operating and installation instructions

Item no.
393-A / 1-044-665

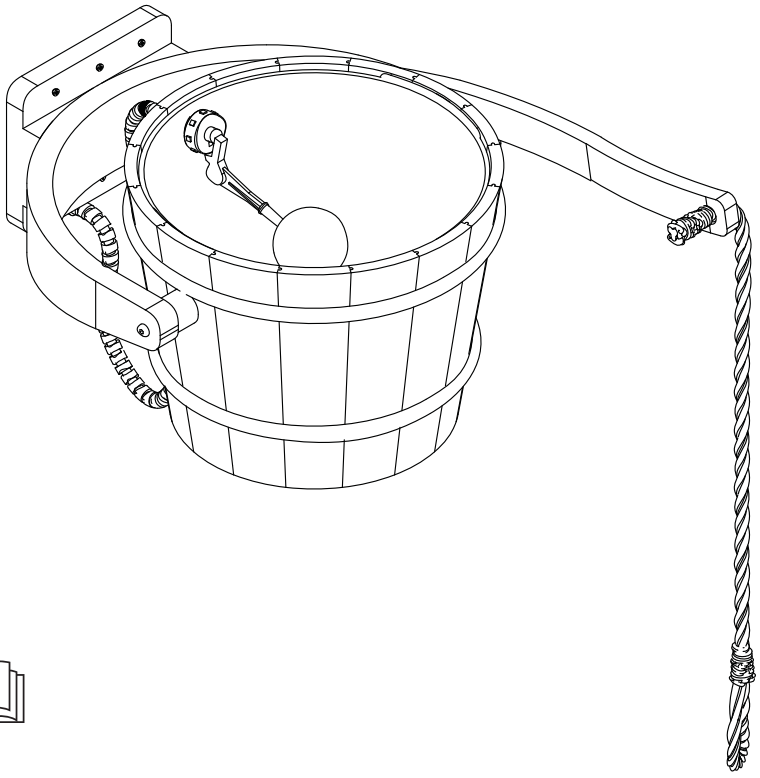

Pail Shower Parts List

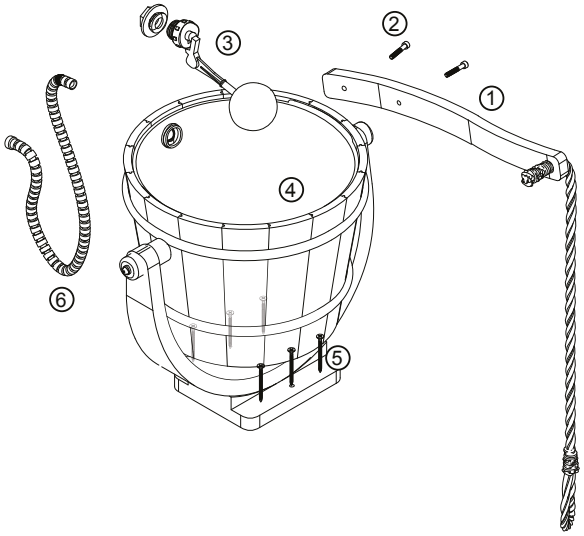

1. Handle with rope
2. M6 Handle Mounting Bolts x 2 pcs
3. Floater
4. Pail Assembly
5. 4mm Pail Holder Mounting Screws x 6 pcs
6. 1/2 inch Connection Hose

Requirements for Installation

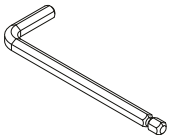

M5 Allen Wrench
(Included in the package)



Water Inlet with
1/2" inch thread



6mm Plastic Tox
(Included in the package)

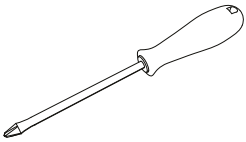

Phillips Screw Driver



Drill

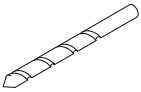

6mm drill bit

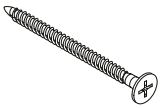

Ø4 mm screws
(Included in the package)

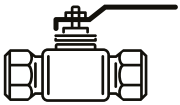

Ball Valve

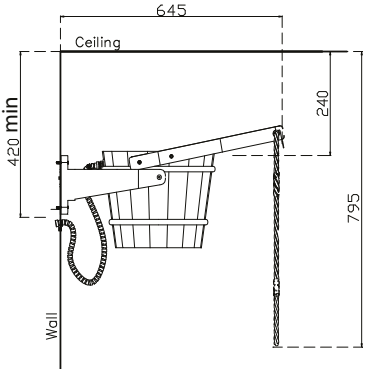

Wall Mounting

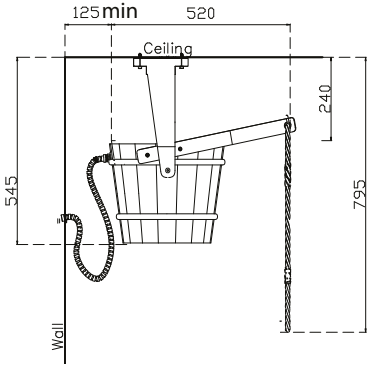

Ceiling Mounting

Pail Shower Installation

1 Choose desired installation either on the wall or ceiling.

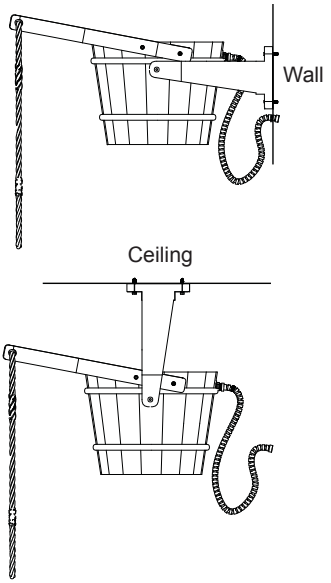

2 Pre-drill the wall/ceiling and insert plastic tox.

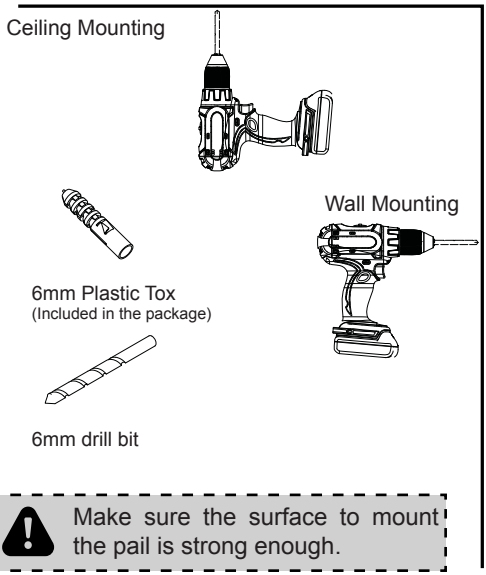

Make sure the surface to mount the pail is strong enough.

3 Screw and mount your pail.

Wall Mounting

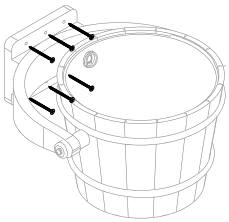

Ceiling Mounting

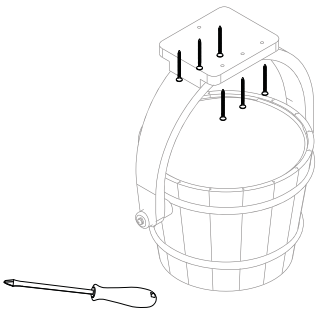

4 Attach floater to the pail and handle.

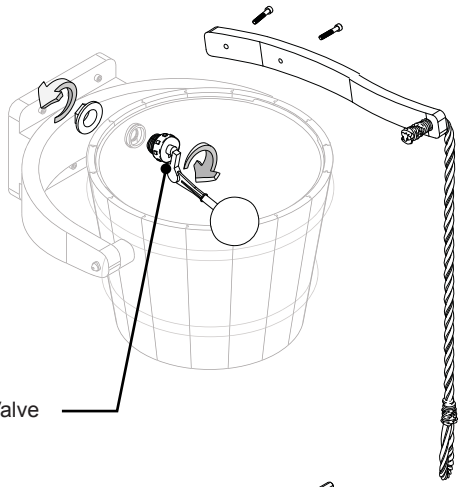

Check if water level is desirable, if not, you can adjust the valve angle

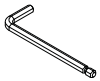

M5 Allen Wrench
(Included in the package)

Note: Above images are for illustrative reference only and may differ from actual item.

Floater Adjustment

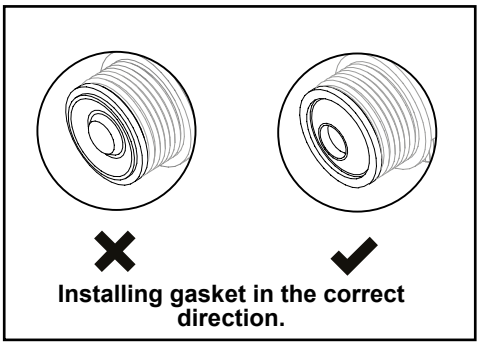

Installing gasket in the correct direction.

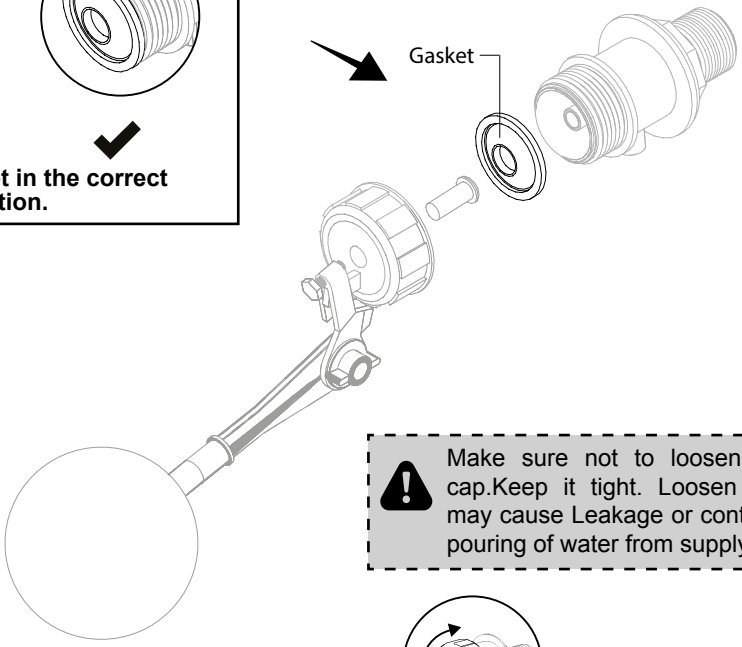

Make sure not to loosen the cap.Keep it tight. Loosen cap may cause Leakage or continue pouring of water from supply.

Do not install the floater upside down.

See to it that the water level is not above the plastic insert when using to avoid overflow.

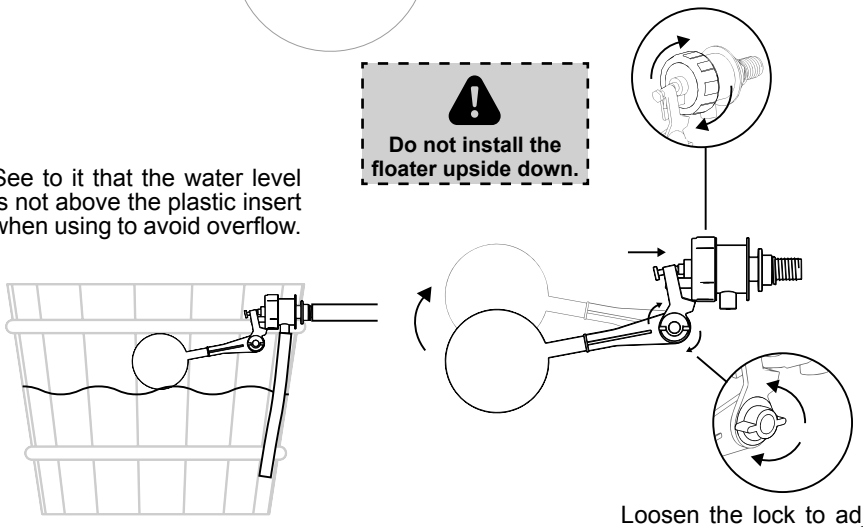

Loosen the lock to adjust the float to the desired water level. Make sure to tighten back else water may overflow.

Note: Above images are for illustrative reference only and may differ from actual item.

5 Attach hose to water inlet

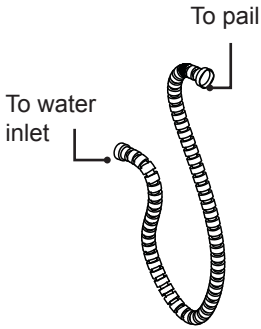

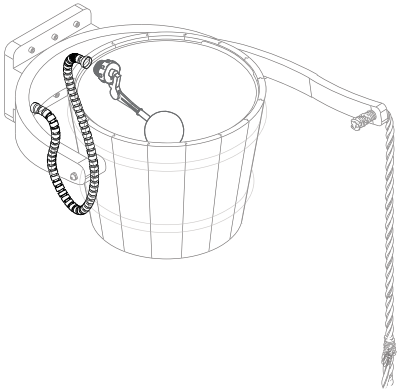

6 Turn on the water inlet. Pull the lever and enjoy your bucket shower.

Water will automatically be refilled after every shower.

Pail shower must be installed after a separate ball valve. After every use, the ball valve must be turned OFF.

If you noticed a broken part of the Pail Shower, stop using it immediately.

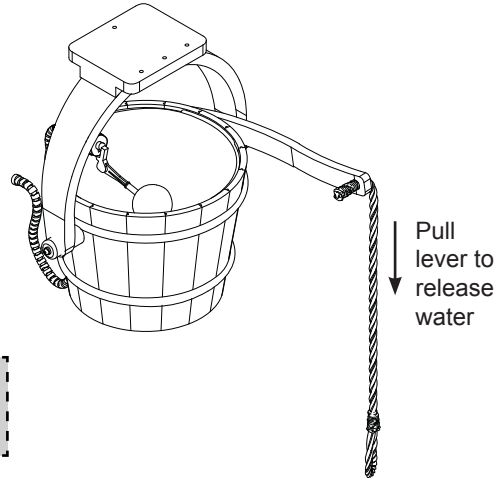

Note: Above images are for illustrative reference only and may differ from actual item.

GLOBAL: Harvia Finland Oy I P.O. Box 12 I Teollisuustie 1-7 I 40951 Muurame I FINLAND I +358 207 464 000 I harvia@harvia.fi
CENTRAL EUROPE: Harvia Austria GmbH | Wartenburger Straße 31 I A-4840 Vöcklabruck I +43 (0) 7672/22900-50 | info@harvia.com
www.harvia.com